≡ *SPEED* DEMON™ ≡

OWNER'S MANUAL

Version 1.09
Version 1.04.05DB
Version 1.07.01

January 2006

BAY TEK GAMES, INC.
1077 East Glenbrook Drive
Pulaski, WI 54162
E-mail: service@baytekgames.com
Web site: www.baytekgames.com

Service: (920) 822-3951 ext. 1102
Parts: ..... (920) 822-3951 ext. 1101
Fax: .....(920) 822-8936
Service Fax: .....(920) 822-1496
Sales: .....(920) 822-3951

Record this information for future reference;

Serial number _____
(Located on Main Circuit board, Rear cabinet door, Front cabinet door)

Date of Installation_____

Installed by _____

Service: (920) 822-3951 ext. 1102
Parts: (920) 822-3951 ext. 1101

For 24 hour pricing and ordering visit our web site at www.baytekgames.com.

TABLE OF CONTENTS

OPERATION AND SETUP SECTION 1

Safety Precautions 1
How the Game Works 1
Service Connections 2
Unpacking, Assembly and Installation 2
Alarm/Sounds 3
Counters 3

PROGRAMMING SECTION 4

Programmable Options 4
Group #1 (S1) 4
Group #2 (S2) 6

PREVENTIVE MAINTENANCE SECTION 7

Maintenance Chart 7

TROUBLESHOOTING & DIAGNOSTICS SECTION 8

Troubleshooting Strategy 9
Diagnose Power Supply 10

SERVICE AND REPAIR SECTION 11

Access to the playfield 11
Removal of the Playfield 11
Turntable Motor Replacement 11
Turntable Position Sensor Replacement 12
Ball Shoot Solenoid Replacement 12
Circuit boards 13
Bonus Tickets Display Circuit Board . 13
Ball Drop Sensor Circuit Board 14
Main Circuit Board 14

ELECTRICAL DRAWINGS SECTION 16

12 Volt Jumper Cable (J1) Connector .. 16
Volume Cable (J2) Connector 16
Sensor Cable (J3) Connector 17
Jumper (J4) Connector 18
Jumper (J5) Connector 19
Gen 5 Main Board Schematics 20
Communications – Serial EEprom 21
Input Section A – Configuration Switches 22
Input Section B – Inputs RE, RC 23
Output Section A – Chase Lights, Q13 - Q16 24
Output Section B – Q17 – Q24 25
Output Section C – Q5 – Q12 26
Power Section 27
Processor Section – Input RD 28

SPARE PARTS – SPEED DEMON 29

TECHNICAL SUPPORT 31

OPTIONAL TICKET PATTERNS 32

WARRANTY INFORMATION 34

REPAIR RECORD 35

NOTES 36

OPERATION AND SETUP SECTION

Safety Precautions

CAUTION: ***Electrical Shock Hazard.***
Do not perform repairs or maintenance on this game with power ON. Unplug the unit from the wall outlet or shut off power at the power strip inside the cabinet.

CAUTION: ***Electrical Shock Hazard.***
Always plug game into a grounded circuit.

CAUTION*: Cutting Hazard.*
Always replace broken or scratched glass panels with tempered glass. Never use window glass in this game.

CAUTION: ***Use of flammable substances can cause severe burns or personal injury.***
Always use non-flammable solvents for cleaning parts and surfaces of this game. Do not use flammable substances such as gasoline, kerosene or thinners.

Figure 1 Demon's Turntable

How the Game Works

A simple game with a winner every time, but a hard game to master for bonus tickets. The player, using a pinball type shooter, shoots a small ball up into a rotating nine hole disk in the playfield. See figure 1. If the ball drops into one of the six ticket winning holes, the player is immediately rewarded with that number of tickets. If the ball drops into one of the three 'Speed Demon' holes, the upper bonus wheel comes into play.

Figure 2 Speed Demon Game

The bonus wheel is comprised of three rings, each divided into segments with bonus ticket values, and a center jackpot 'Win Tickets' display that increments with each game played. During bonus play, the object for the player is to step up through the bonus rings to win the jackpot. The player must hit the 'Stop' button at

just the right time to stop the rotating light on a red ‘demon’ arrow that takes them to the next level. Stopping on any other ring segment ends the game and dispenses tickets based on that segment value.

For multiple games set up for progressive play, the progressive display and each game’s ‘Win Ticket‘ display would be the same value.

The bonus ring ticket counts can be changed as well as the jackpot settings. See programming section on page 4 for more details.

Tickets are dispensed as they are won. If the ticket dispenser runs out of tickets, the payout will continue after the dispenser is refilled.

Service Connections

All Bay Tek games are 110V or 220V(optional) and draw 2-3 amps at startup. Outlets should be rated for 20 amps or higher.

IMPORTANT: *Be sure that the electrical power outlets match the game requirements. See outlet labeling at rear bottom of game cabinet.*

Unpacking, Assembly and Installation

1. Inspect the game for any damaged, loose or missing parts. If damage is found please contact the carrier first. Then contact Bay Tek at: service@baytekgames.com, or phone (920) 822-3951 to order replacement parts.

CAUTION: ***Lifting Hazard. Lifting heavy objects can cause back, neck and other injuries. Be sure adequate lifting and moving devices are available when unloading, unpacking and moving this game.***

2. Place the game near the final location and remove the keys taped in the coin return and open the rear door panel.

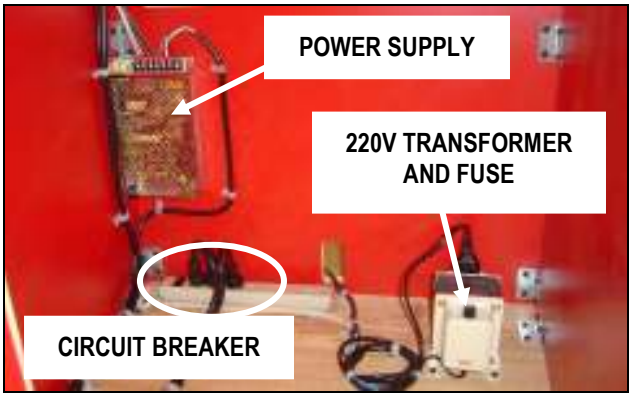

Figure 3 Power Supply with optional 220V setup.

3. Uncoil the power cord and feed the cord through one of the holes in the bottom board at the back of the cabinet. Plug the power cord into the wall outlet.

4. Place the game in its final position. The game must be reasonably level to insure proper ball action. If leveling is necessary, use adequate shims and blocking to prevent the game from tipping.

5. Open the front access door and disconnect the ‘Stop’ button wiring. Release the two toggle latches securing the ‘Stop’ button panel. Slide the top glass downward out of the cabinet.

6. Place the two balls, shipped with the game, into any hole in the turntable. The game does not have to have power on. Replace the top glass and ‘Stop’ button access panel.

7. Turn power ON at the power strip located inside the cabinet at the bottom of the rear panel. The turntable should start to rotate within a few seconds.

8. Fill the ticket tray inside the cabinets. The Win Tickets display will show the letters ‘Lo’ to indicate when the level of the tickets drops to approximately 1/2 inch high.

9. Play the game a few times to make sure that everything is working. (For testing, open

the front panel and trip one of the coin count wires a few times to establish game credits). If something is not working properly, review the troubleshooting section first. If the problem cannot be resolved, contact the Bay Tek service department at: service@baytekgames.com, or phone (920) 822-3951.

10. Once everything is set and working properly, close and lock the front panel. Use glass cleaner and a soft clean cloth to clean all the glass on the game. Do not use solvents to clean the game decal surfaces. The game is now ready to play.

Alarm/Sounds

A voice chip enhances the visual effects of the game during normal play and during 'Attract" mode of operation. A volume control is located on the front door panel.

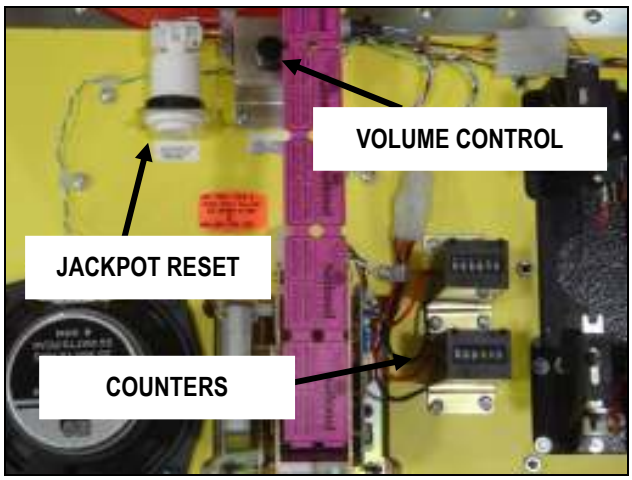

Figure 4 Game Controls

Counters

Counters are mounted inside the cabinet on the front door panel. The counters track the number of games played and tickets dispensed. The counters cannot be reset.

PROGRAMMING SECTION

Programmable Options

Figure 5 Dipswitch Locations on Main Circuit Board

The ticket patterns, bonus ring settings, coins per play, attract mode and more are controlled by dipswitches located on the main circuit board. See instructions below for details.

The main circuit board is located on the inside wall of the cabinet with access through the rear door. **Be sure power is off before setting these dipswitches.**

IMPORTANT: *Power must be OFF to the game when setting dipswitches. Turn OFF the power strip inside the cabinet. Set the dipswitches to the desired settings, wait 30 seconds and then turn ON power at the power strip.*

Group #1 (S1)

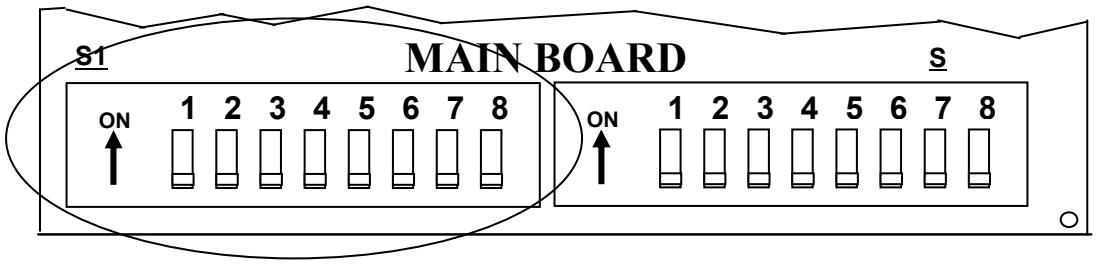

* - indicates the default setting

TICKET PATTERN

SWITCH #			PATTERN #		DESCRIPTION
1	**2**	**3**			Dipswitches # 1, # 2 and # 3 (S1) are used to set the ticket pattern number. The ticket pattern number determines the number of tickets dispensed for each segment on the three bonus rings. Changing these settings also required changing the ring display.**
OFF	OFF	OFF	**1 ***	**S1** ON 1 2 3	* The setting to the left shows the default ticket pattern number of 1 that corresponds to the ticket count on the rings as shipped from the factory.
OFF	OFF	ON	**2**		**Additional patterns are shown at the end of this manual, see page 32, and are available by contacting Bay Tek.
OFF	ON	OFF	**3**		
OFF	ON	ON	**4**		
ON	OFF	OFF	**5**		
ON	OFF	ON	**6**		
ON	ON	OFF	**7**		
ON	ON	ON	**8**		

BONUS SPEED RING SETTINGS

SWITCH #		SPEED		DESCRIPTION
4	**5**		**S1** ON 1 2 3 4 5	Dipswitches #4 and #5 (S1) are used to set the speed of the revolving light on the bonus ring during bonus play. The 'Slow' speed is the easiest. * The drawing to the left shows the default factory setting of 'Fast'.
OFF	OFF	**SLOW (easy)**		
OFF	ON	**FAST**		
ON	OFF	**FASTER ***		
ON	ON	**FASTEST**		

COINS PER PLAY

SWITCH #	COINS		DESCRIPTION
6		**S1** ON 1 2 3 4 5 6	Dipswitch #6 (S1) is used to set the number of coins needed for each ball to be played. * The drawing to the left shows the default factory setting of '1'.
ON	**2**		
OFF	**1 ***		

ATTRACT MODE

SWITCH #	ATTRACT		DESCRIPTION
7		**S1** ON 1 2 3 4 5 6 7	When dipswitch # 7 (S1) is enabled, the game will start to run in 'Attract' for a short time every 3 minutes. During the 'Attract' mode, the attraction lighting will light up, and the audio will play select tracks from the audio bank embedded in the software. * The drawing to the left shows the default factory setting of 'enable'.
ON	**Enable ***		
OFF	**Disable**		

JACKPOT INCREMENT PER GAME

SWITCH #	VALUE		DESCRIPTION
8		**S1** ON 1 2 3 4 5 6 7 8	Dipswitch # 8 (S1) is used to set the jackpot (Win Tickets display) increment for each play to 1 or zero (no incrementing. If no incrementing is set, the default ticket value is the 'Jackpot Maximum' as set on dipswitches #6, #7 and #8 (S2) below. * The drawing to the left shows the default factory setting of 1 increment for each coin played.
ON	**1 ***		
OFF	**0**		

Group #2 (S2)

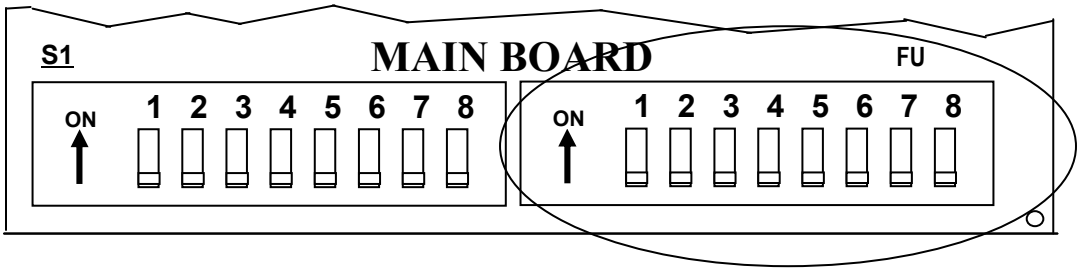

MERCY TICKET VALUE ON WHEEL

SWITCH		VALUE		DESCRIPTION
1	**2**			Dipswitches #1 and #2 (S2) are used to set the value of the six ticket winning holes in the rotating turntable. * The drawing to the left shows the default factory setting of '3' tickets per hole.
OFF	OFF	**1**		
OFF	ON	**2**		
ON	OFF	**3 ***		
ON	ON	**4**		

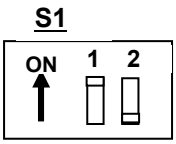

JACKPOT MINIMUM TICKET PAYOUT

SWITCH #			VALUE		DESCRIPTION
3	**4**	**5**			Dipswitches #3, #4 and #5 (S2) are used to set the minimum number of jackpot tickets dispensed. This is the starting ticket value for jackpot and progressive displays. * The drawing to the left shows the default factory setting of 250 tickets minimum.
OFF	OFF	OFF	**50**		
OFF	OFF	ON	**100**		
OFF	ON	OFF	**150**		
OFF	ON	ON	**200**		
ON	OFF	OFF	**250 ***		
ON	OFF	ON	**300**		
ON	ON	OFF	**400**		
ON	ON	ON	**500**		

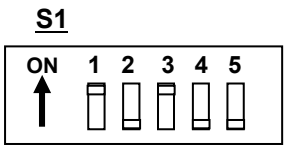

JACKPOT MAXIMUM TICKET PAYOUT

SWITCH #			VALUE		DESCRIPTION
6	**7**	**8**			Dipswitches #3, #4 and #5 (S2) are used to set the maximum number of jackpot tickets dispensed for jackpot and progressive displays. * The drawing to the left shows the default factory setting of 1000 tickets maximum.
OFF	OFF	OFF	**100**		
OFF	OFF	ON	**200**		
OFF	ON	OFF	**300**		
OFF	ON	ON	**400**		
ON	OFF	OFF	**500**		
ON	OFF	ON	**600**		
ON	ON	OFF	**750**		
ON	ON	ON	**1000 ***		

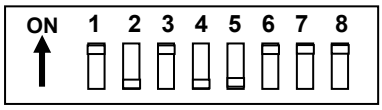

PREVENTIVE MAINTENANCE SECTION

Maintenance Chart

Use the following maintenance chart as a guide only. Actual maintenance intervals will depend on usage and environmental conditions at the location of the game.

Keep a log of all inspections, even if no problem exists, with date and time of inspection, action taken. A sample Repair Record form is included at the end of this manual.

IMPORTANT: *Do not use cleaning solvents on game graphics. Use only a mild soap solution and dry with a clean lint free cloth.*

IMPORTANT: *The game should be shut OFF for cleaning and maintenance.*

CAUTION: ***Use of flammable substances can cause severe burns or personal injury. Always use non-flammable solvents for cleaning parts and surfaces of this game. Do not use flammable substances such as gasoline, kerosene or thinners.***

	Daily	Weekly	Monthly
Inspect game for physical damage. Repair as necessary.	X		
Check all game lighting. Repair/replace lamps as necessary.	X		
Clean outside surfaces with warm soapy water only. Do not use solvents on decals or Acrylic™ surfaces.	X		
Fill ticket tray.	X		
Empty coin tray.	X		
Test game to insure proper operation.	X		
Open game and clean playfield and inner surfaces with a clean soft cloth and glass cleaner. **Insure there is no dirt or debris in the ball chute or on the edges of the ball guides.		X	
Blow paper dust from ticket mechanism. Clean more often if game is used extensively or conditions dictate cleaning sooner.		X	
Lubricate plunger with light machine oil.			X
Check all fasteners for tightness			X
The stepper motor and associated gearing DO NOT require any lubrication.			

TROUBLESHOOTING & DIAGNOSTICS SECTION

Troubleshooting Chart		
Problem	**Probable Cause**	**Remedy**
No power to the game.	a. Unplugged. b. Blown fuse c. Circuit breaker tripped. d. Bad power supply.	a. Check wall outlet. b. Check transformer fuse (220v applications only). c. Reset power strip breaker switch or building circuit breaker. d. See power supply diagnostic on page 10.
No Audio	a. Volume too low. b. Loose wire. c. Main circuit board malfunction.	a. Increase the volume at the volume control at the inside of the front door panel. b. Check audio cable connections to speaker, volume control and main circuit board. c. Replace main board with board from another Gen 5 game if possible to isolate the problem to the main circuit board.
Demon wheel slips or does not rotate.	a. Faulty wheel motor. b. Alignment problem or broken gear teeth. c. Bad Wiring.	a. Replace stepper motor. b. Remove play in gears by sliding motor in bracket towards small gear and tighten in place. Replace gear(s). c. Check continuity of wire from motor to main board.
Ball does not position at plunger when coin is inserted.	a. Fuse blown. b. Faulty solenoid used to push ball into position. c. Bad Wiring	a. Replace fuse on circuit board behind the solenoid mounting board. See b. Replace solenoid. c. Check continuity of wire from solenoid to main board.
Wheel doesn't score properly.	a. Bad turntable position sensor. b. Bad wiring.	a. Replace the position sensor. b. Check continuity of wire from motor to main board.
Rotating bonus light doesn't stop when button is pushed.	a. Faulty button switch. b. Bad Wiring	a. Replace button switch. b. Check continuity of wire from button switch to main board.
Lighting not functioning properly. Bonus Ticket Display Fluorescent	a. Burned out lamps. b. Cable problem. c. Bad circuit board – bad LED's d. Main circuit board malfunction.	a. Replace lamps. b. Check and repair cable to main board. c. Replace faulty circuit board. d. Replace main board with a spare Gen 5 board if possible to isolate the problem to the main circuit board.

Troubleshooting Chart		
Problem	**Probable Cause**	**Remedy**
Tickets do not dispense.	a. Ticket tray empty. Faulty low ticket sensor switch. b. Sensor switch stuck or switch wire bent out of position. c. Faulty cable to dispenser. d. Dirty opto-sensor or paper dust buildup in ticket dispenser. e. Ticket dispenser not working. f. Main circuit board malfunction.	a. Fill ticket tray. Replace low ticket sensor switch. b. Clean ticket tray of dirt and loose tickets or debris. Bend switch wire to correct position under tickets. c. Check wiring continuity from dispenser to main board. Check for pinched, broken or disconnected cable. Replace as necessary. d. Clean with compressed air and if necessary wipe sensor with isopropyl alcohol on a cotton swab. e. Replace dispenser with spare working dispenser. f. Replace main board with a spare Gen 5 board if possible to isolate the problem to the main circuit board.
Wrong number of tickets dispensed.	a. Ticket Pattern or other ticket dipswitches set wrong. b. Dirty opto-sensor on ticket dispenser. c. Faulty ticket dispenser. d. Main circuit board malfunction.	a. Check and reset dipswitches for proper setting. b. Clean with compressed air and if necessary wipe with isopropyl alcohol on a cotton swab. c. Replace with spare working dispenser. d. Replace main board with a spare Gen 5 board if possible to isolate the problem to the main circuit board.

Troubleshooting Strategy

Use common sense and a systematic method of troubleshooting to determine the exact problem, probable cause and remedy. Use the process of elimination to find the faulty component. Always check for the simple and obvious causes first such as unplugged, loose or broken wires, bad sensors, blown fuses, bent, pinched, stuck or jammed components.

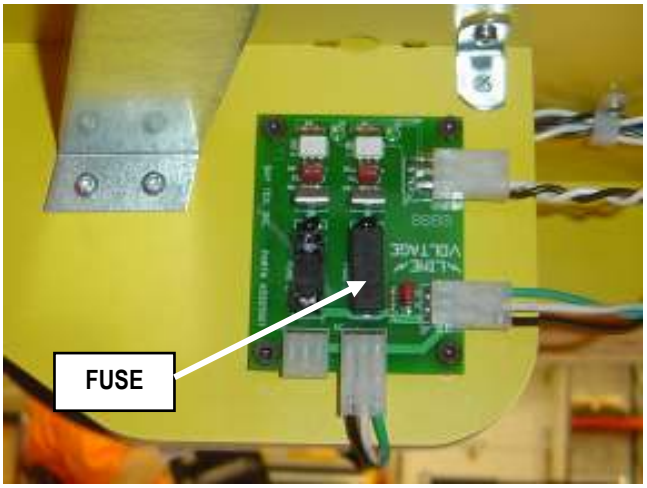

Figure 6 Ball Shooter Solenoid Fuse (access from rear door)

Use 2 amp, 250V (5 x 20mm) fuse (p/n A5FUSE3).

Diagnose Power Supply

Use the following procedure to check the power supply for Gen 5 games.

Check the small green LED light on the power supply circuit board. If the light is out there is a short somewhere. If the light dims, there is an overload in one of the circuits such as a bad motor.

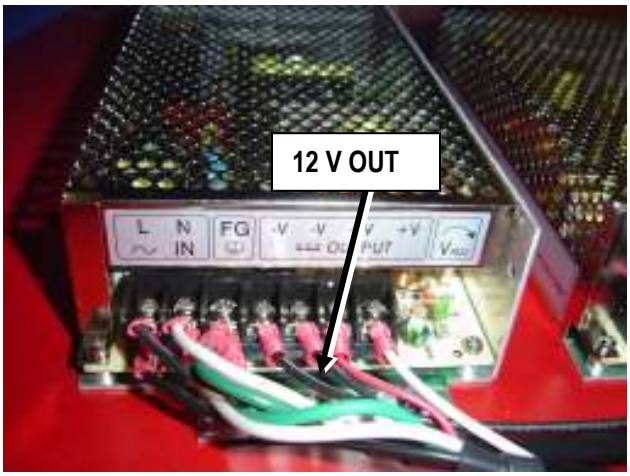

Figure 7 Power Supply

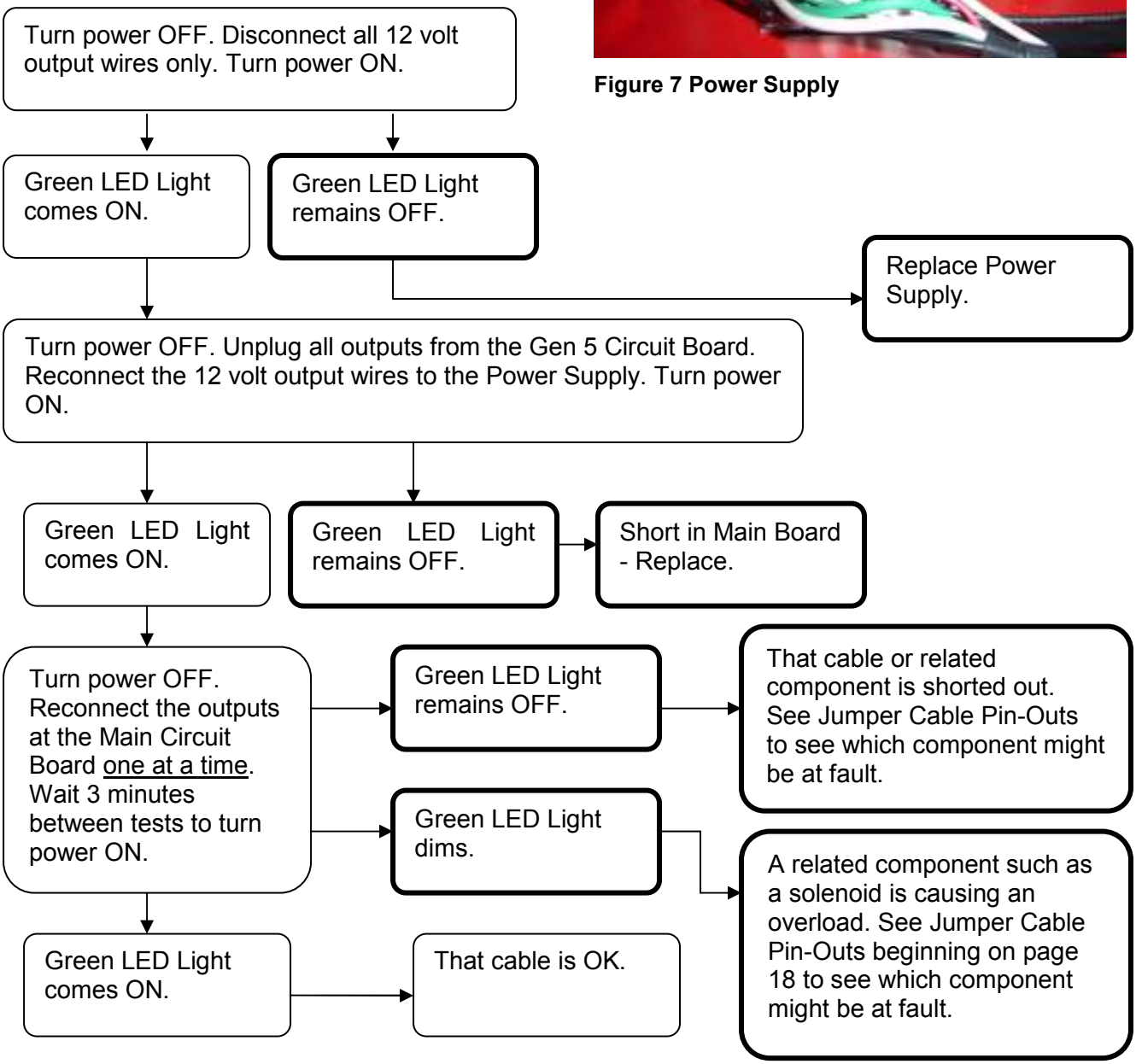

SERVICE AND REPAIR SECTION

CAUTION: ***Electrical Shock Hazard.***
Do not perform maintenance or repair of this equipment with power ON. Unplug the unit from the wall outlet or shut off power at the power strip inside the cabinet.

Access to the playfield

1. Shut power OFF to the game.

2. Open the front access door and disconnect the "Stop button wiring. Reach up and unhook the two cabinet latches under the "Stop" button panel and remove the panel.

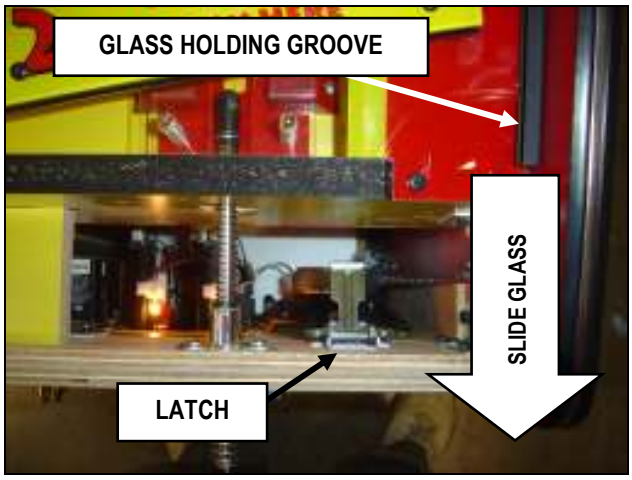

Figure 8 Playfield Access

3. The top glass is held on the sides with black grooved brackets. Slide the glass out the front of the unit and set aside.

Removal of the Playfield

While most repairs can be done with the playfield in place, it might be easier in some instances to remove the playfield from the game. Once the top glass is removed the playfield itself can be removed.

Figure 9 Playfield Fasteners

1. Open the rear access door and remove the two screws holding the playfield to the bottom side brackets.

2. Disconnect the power supply connector and display lighting connectors on the main circuit board mounted to the back of the playfield. Disconnect the two connectors going from the playfield to the front access panel. Unplug the fluorescent lights and the black power cord from the circuit breaker power strip to the AC board on the playfield. Remove plastic wire clips.

3. Remove the two plastic diffusers covering the fluorescent lights on either side of the playfield.

4. Pull the playfield backward slightly, then lift the front and remove from the unit from the game.

Turntable Motor Replacement

1. Disconnect the motor wiring at the connector.

2. Remove the two hex head bolts and star washers that hold the motor to the bracket. Lower the motor from the game. Be careful not

to damage the small gear on the end of the motor shaft.

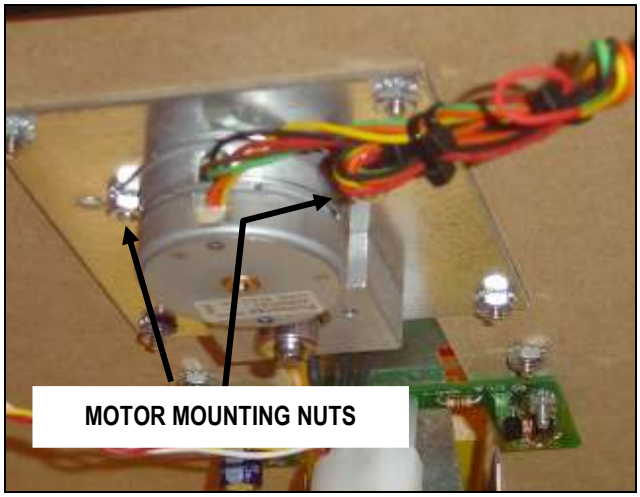

Figure 10 Wheel Drive Motor Replacement

3. Loosen the two setscrews holding the small gear in place on the motor shaft and remove the gear.

4. Install the gear on the new motor shaft and install the new motor assembly in the game. Do not force into place, be sure the gears are meshing properly. Secure with two star washers and nuts.

5. Reconnect the motor wiring at the connector. Turn power ON and check for proper operation of the wheel.

Turntable Position Sensor Replacement

The wheel position sensor is located just behind the turntable motor, mounted to the motor bracket. The hub of the wheel is marked in three spots to indicate the location of the bonus 'Demon'. When the drop ball sensor detects a ball, and the wheel is positioned on one of the three 'demons', a bonus round is played.

To replace the sensor,

1. Disconnect the position sensor wiring at the connector.

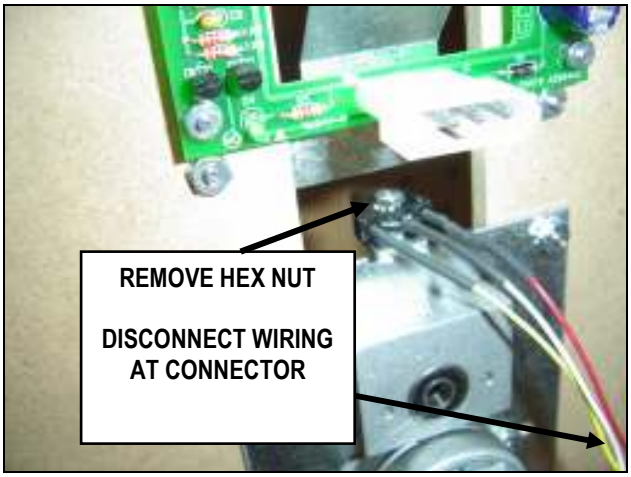

Figure 11 Turntable Position Sensor

2. Remove the hex nut and star washer holding the position sensor in place on the motor bracket.

3. Remove and replace the sensor. Reconnect the wiring at the connector.

Ball Shoot Solenoid Replacement

1. Disconnect the solenoid wiring at the solenoid terminals. Note the position of the black and white wires.

2. Remove the Phillips head screw and nylon spacer securing the ball pusher to the solenoid shaft.

3. Remove the four hex nuts and star washers that mount the solenoid to the ball shooter channel. Remove the ground wire and solenoid.

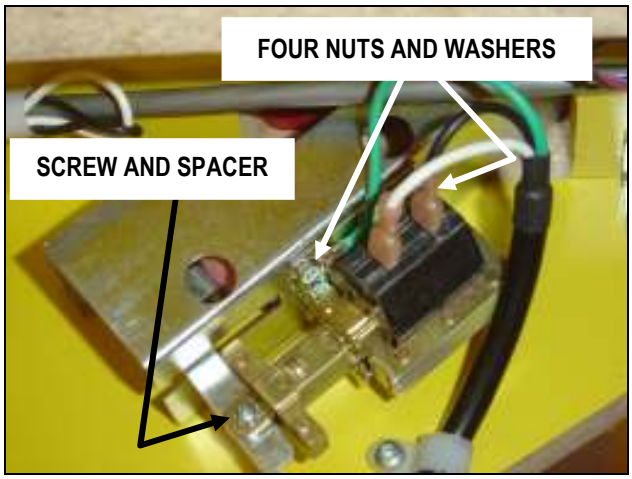

Figure 12 Ball Shooter Solenoid

4. Reassemble the new solenoid in the reverse order.

5. Connect the wiring as shown above and test before returning the game to operation.

Circuit boards

CAUTION: ***Static electricity could harm circuit boards and processor chips. Always ground yourself by cable or by touching metal surfaces prior to removing or servicing electronic equipment in this game. Avoid working on carpeted surfaces.***

Bonus Tickets Display Circuit Board

The eight bonus ring circuit boards are attached to the backside of the bonus rings, and the 'Win Tickets' display circuit board is attached to the game structure. They can be replaced by following these steps.

1. Open the rear door panel and shut off power to the game by turning the power strip OFF.

2. Unplug the white phone cord from the display circuit board.

'Win Tickets' Display Board

3. Unplug the ribbon cables from the display circuit board.

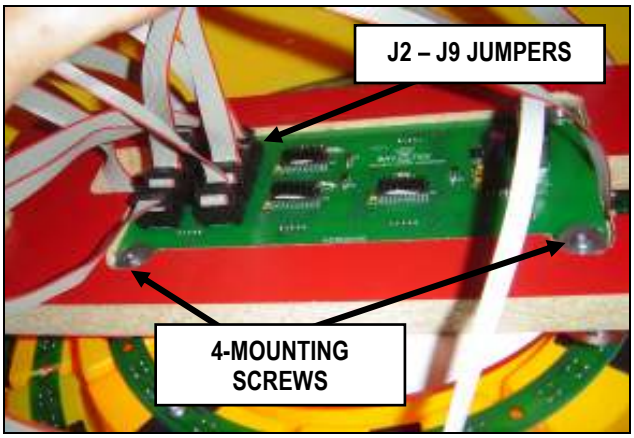

Figure 13 'Win Tickets' Display Board

4. Remove the four square head screws holding the circuit board to the mounting board.

Bonus Ring Circuit Boards

5. Remove the 16 screws holding the yellow cover over the top of the game for easier access to the bonus ring circuit boards.

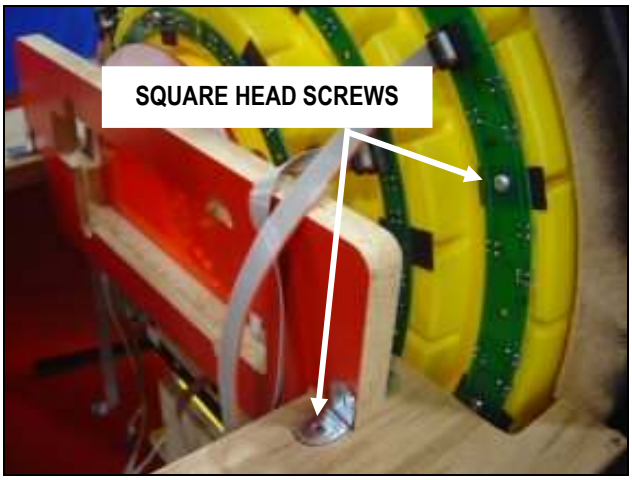

Figure 14 Bonus Ring Access

6. It may be necessary to remove the center "Win Tickets" display board. It is held in place with four wood screws through side brackets as show in Figure 14.

7. Remove the square head screws holding the faulty bonus ring circuit board in place.

8. Disconnect the ribbon cable from the old circuit board, install on the new board and install the board on the ring. Secure in place with the square head screws.

9. Reinstall the center 'Win Tickets' board if removed, and secure to the frame with four wood screws.

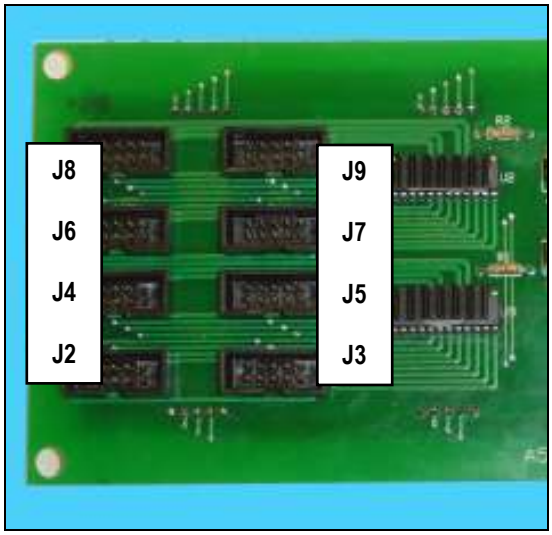

Figure 15 Jumper Locations on Ticket Display Board

10. Plug in the ribbon cables to the circuit board as shown in Figure 15 and Figure 16. It is important that they be in the proper positions on the circuit board.

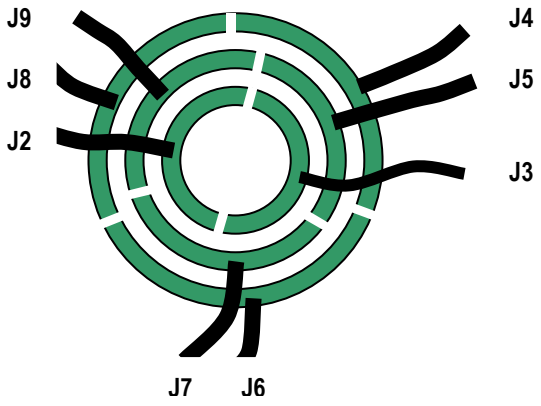

Figure 16 Jumper Positions

11. Test after re-assembly, by tripping the coin count wire, to insure proper operation. Reinstall yellow cover if removed.

Ball Drop Sensor Circuit Board

Figure 17 Ball Drop Sensor

The ball drop sensor, located under the ball drop hole, is replaced from the front or rear access door.

1. Disconnect the sensor wiring and remove the two hex head nuts and star washers holding the circuit board to the underside of the playfield.

2. Install the new board and reconnect the wiring.

3. Test for proper operation.

Main Circuit Board

Replacing the main Gen 5 circuit board.

1. With the power to the game OFF, carefully unplug the various connectors, black chase lighting cables and the white credit display cable.

2. Remove the four Phillips head screws at the four corners of the board and remove the board from the mounting panel. See Figure 18.

Figure 18 Gen 5 Main Board

3. Before installing the new board, check to be sure that the dipswitches are set in the same position as the old board.

NOTE: *If swapping the circuit board with a spare Gen 5 board for testing purposes, be sure to also swap out the software chip. Use extreme care to prevent static electricity and to prevent bending socket pins.*

4. Install the board and reconnect the wiring connectors, black chase lighting cables and the white display cable.

5. Re-test the game.

ELECTRICAL DRAWINGS SECTION

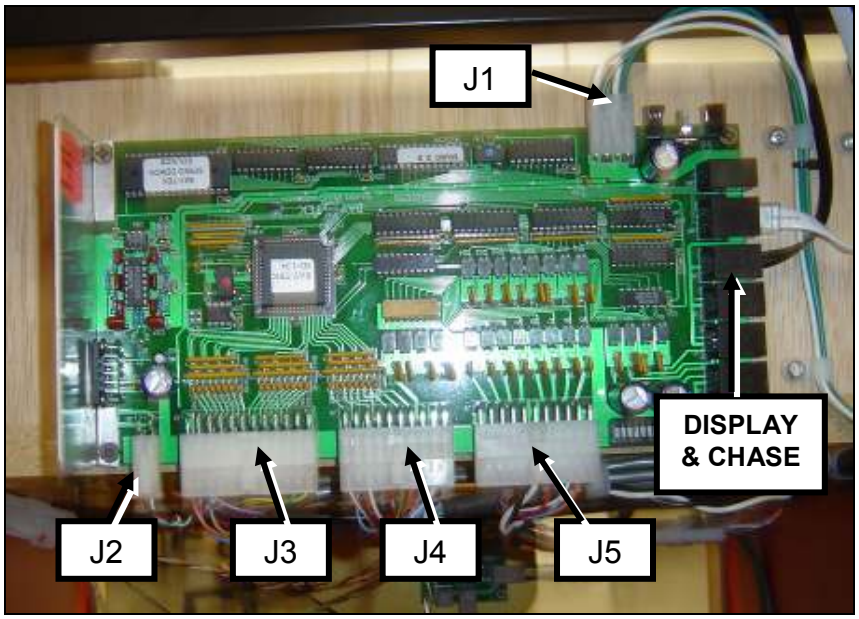

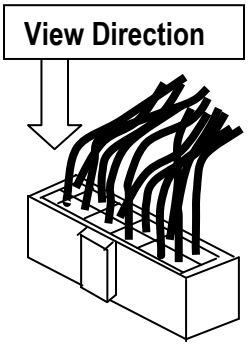

All connector drawings are as Viewed from the pin out position.

Figure 19 Gen 5 Main Board Jumper ID

12 Volt Jumper Cable (J1) Connector

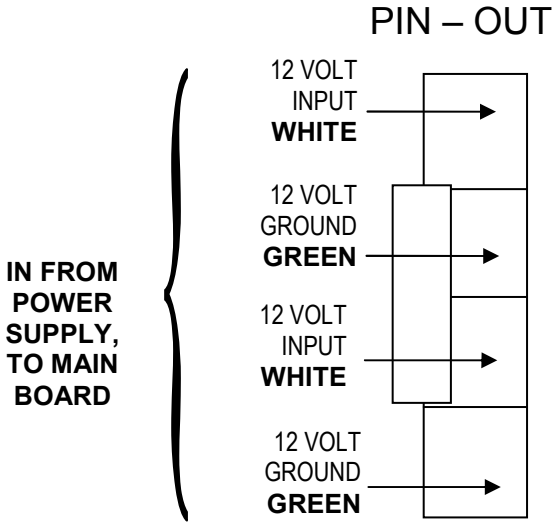

Volume Cable (J2) Connector

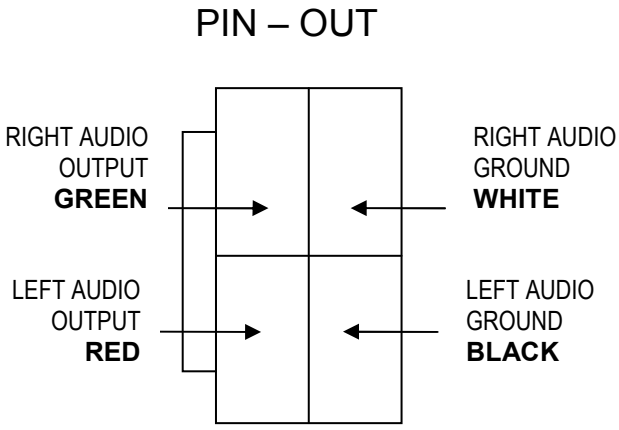

Sensor Cable (J3) Connector

PIN - OUT

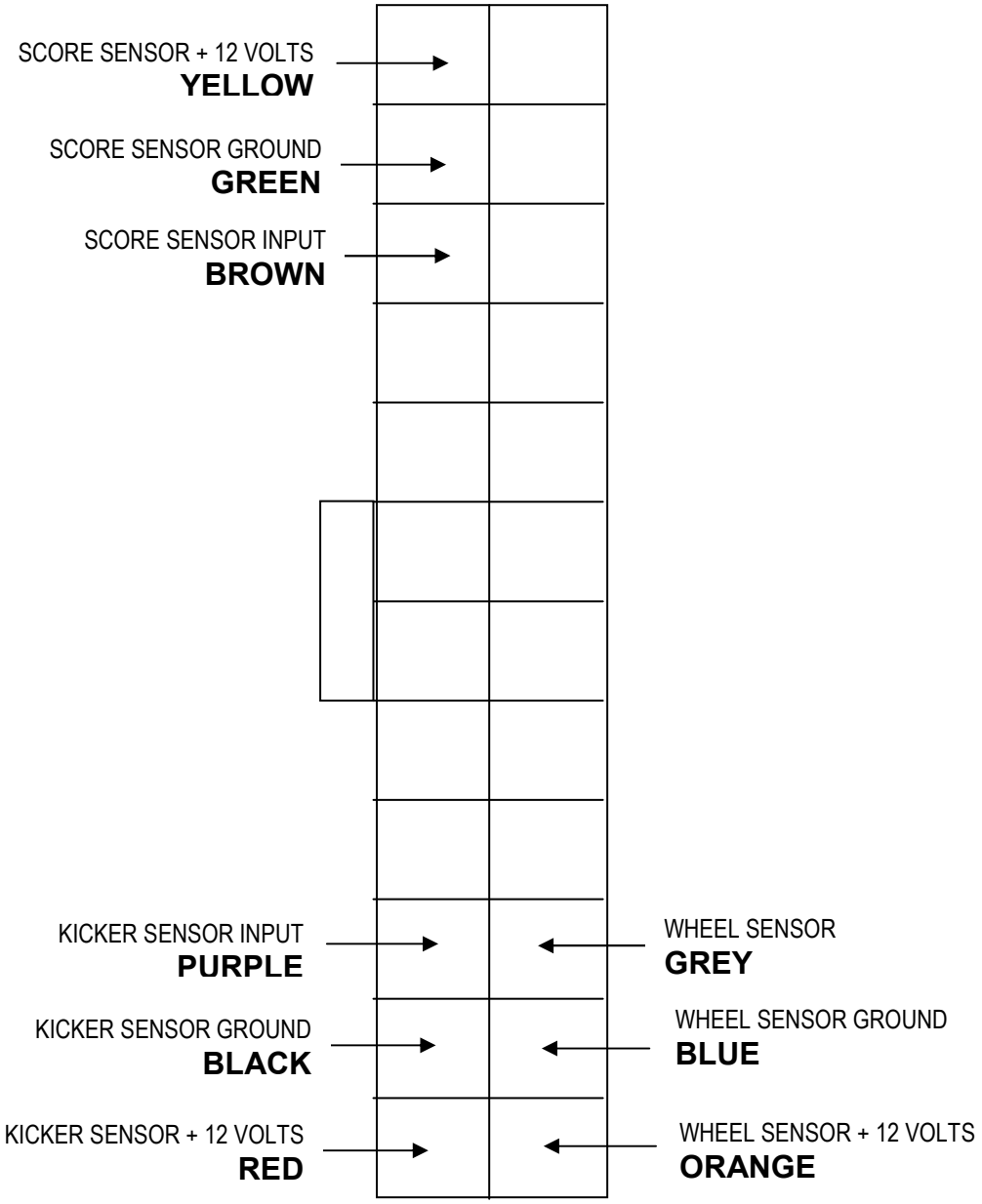

Jumper (J4) Connector

PIN – OUT

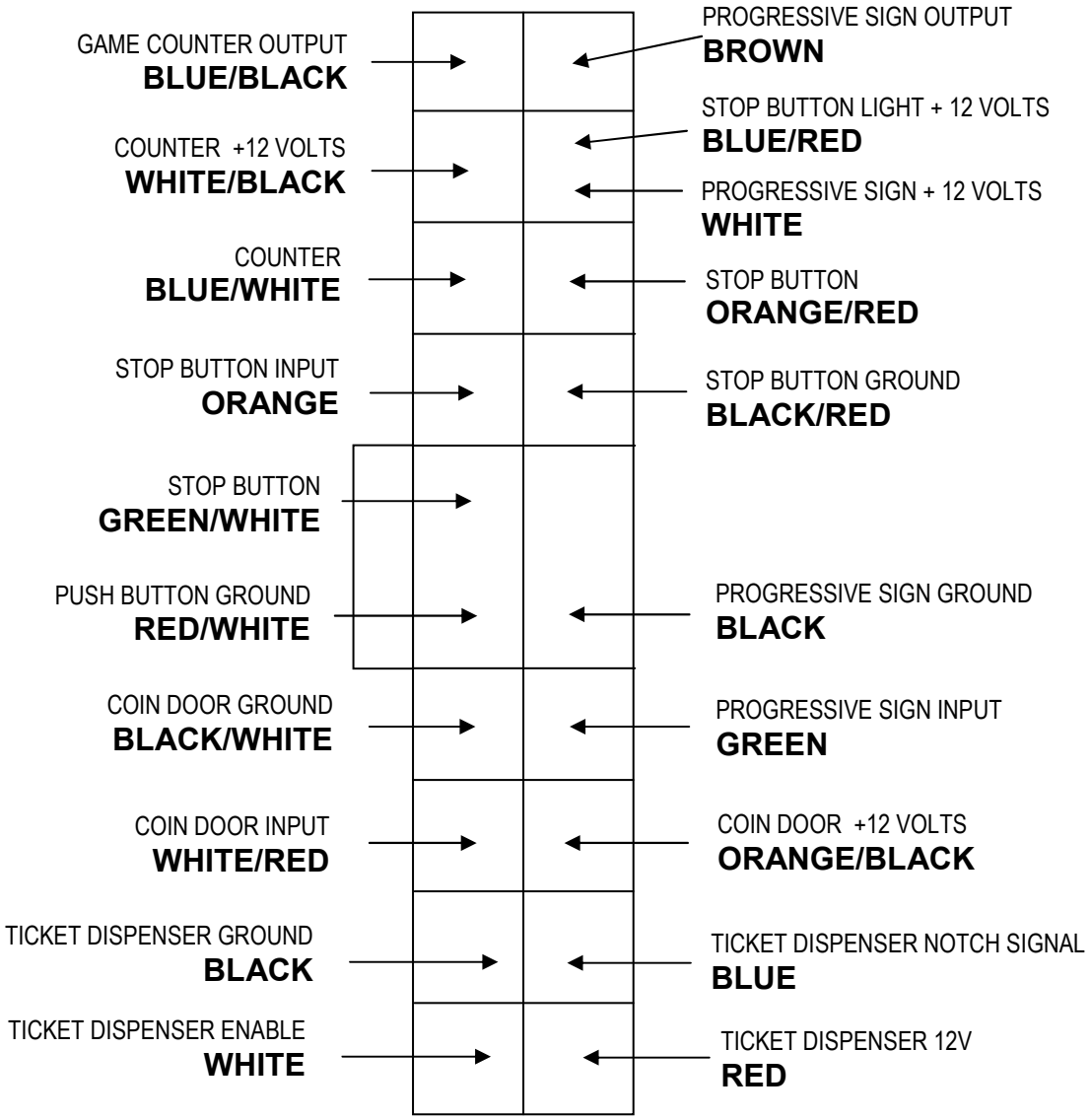

Jumper (J5) Connector

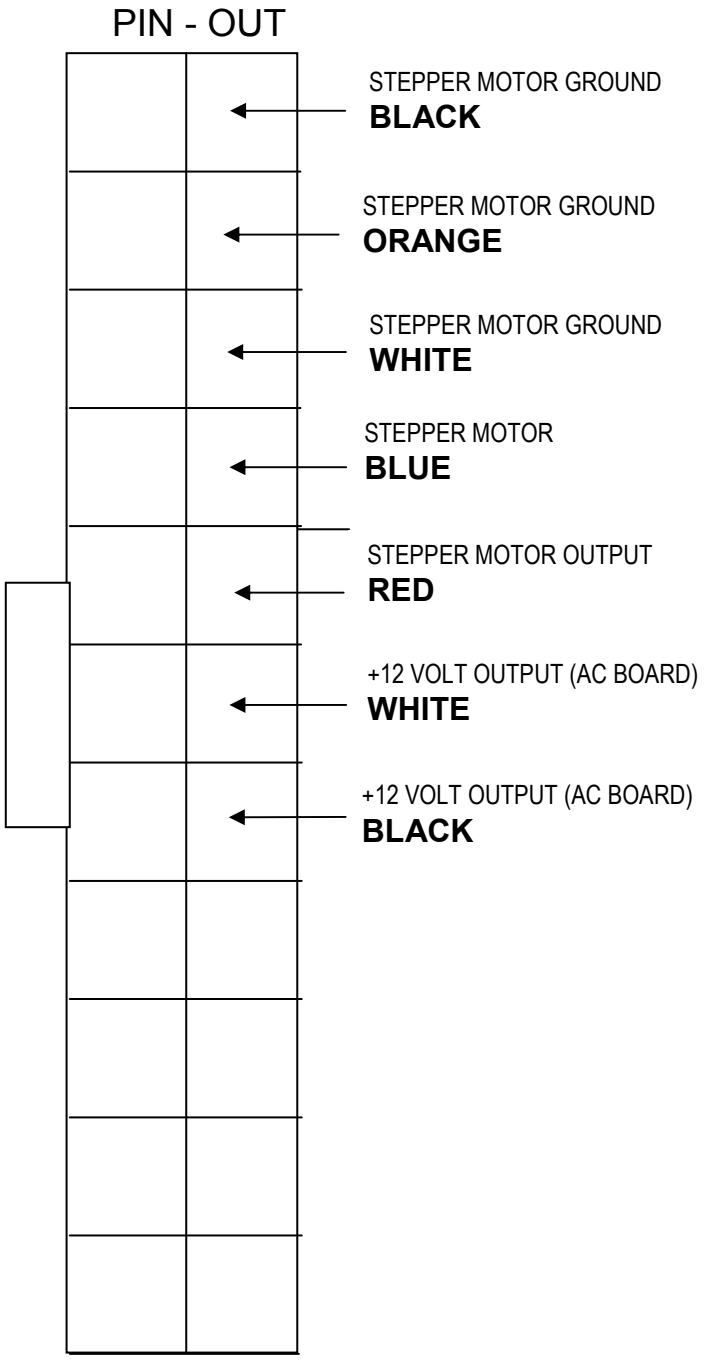

Gen 5 Main Board Schematics

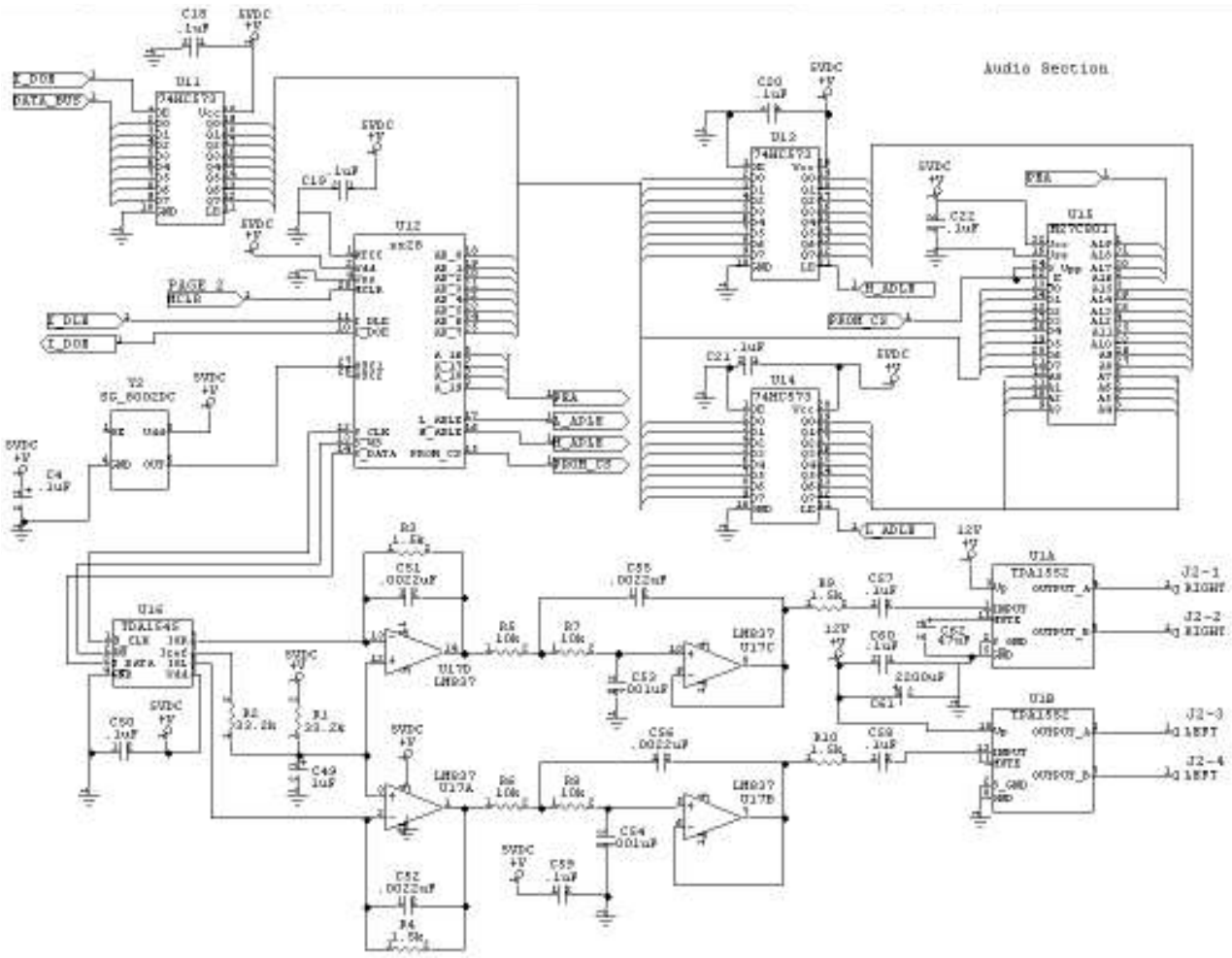

Communications – Serial EEprom

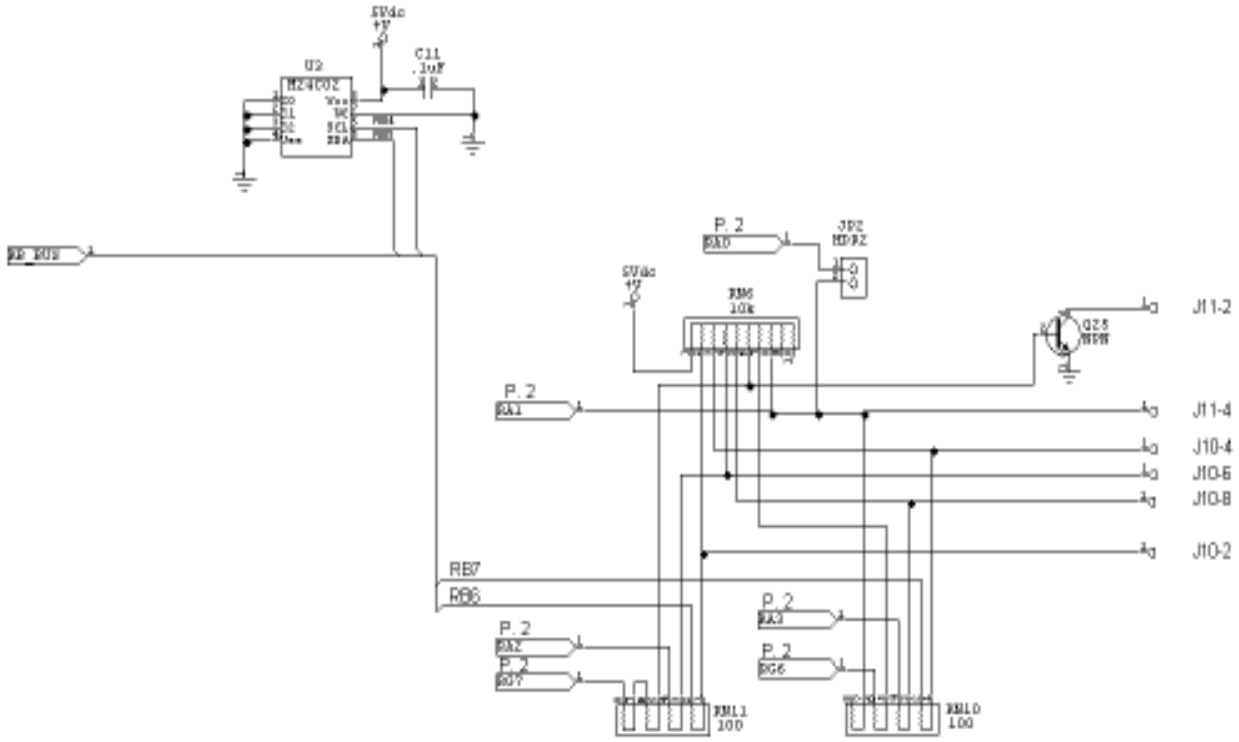

Input Section A – Configuration Switches

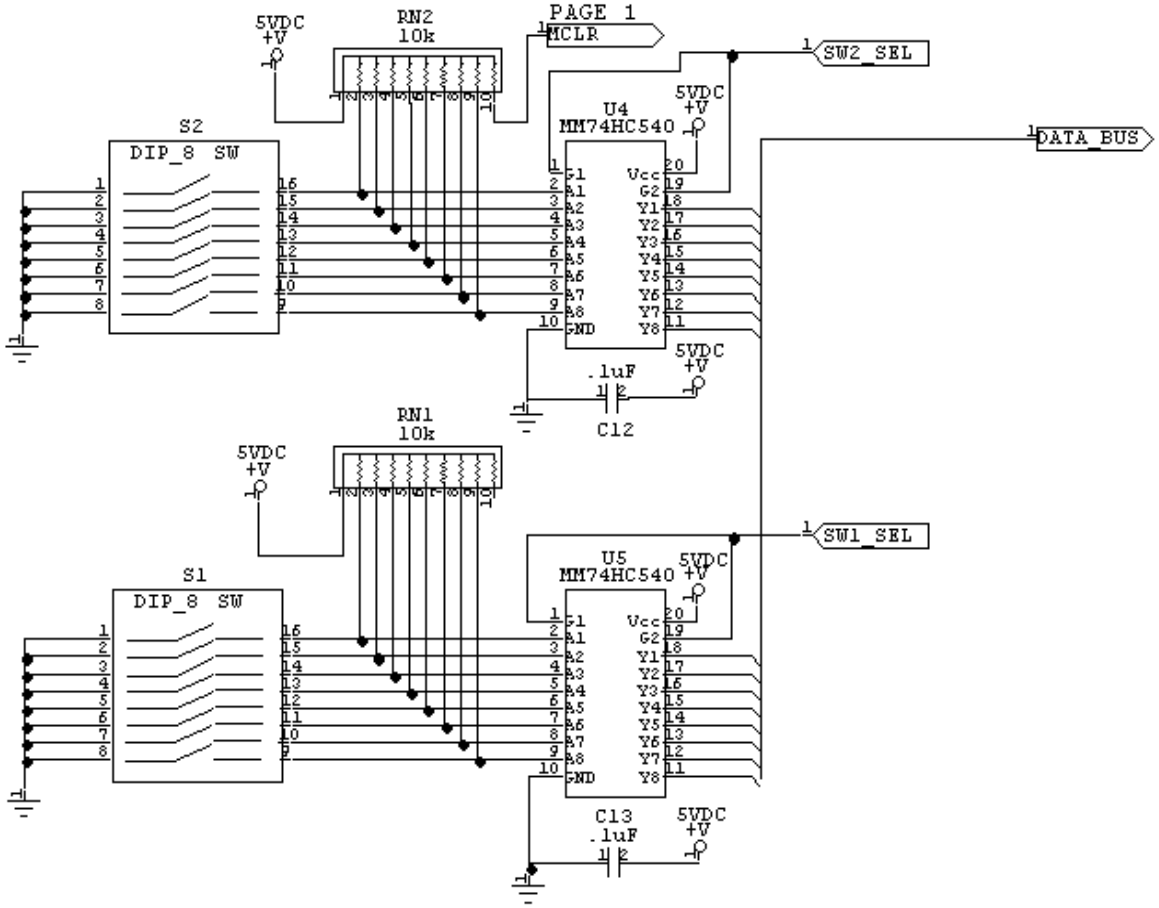

Input Section B – Inputs RE, RC

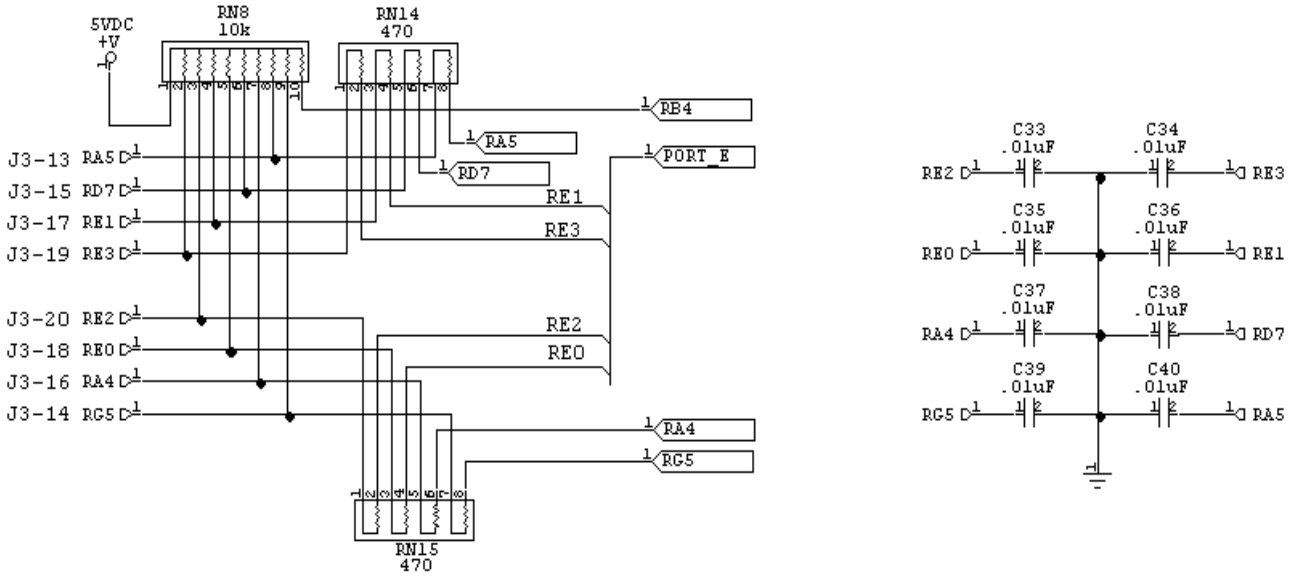

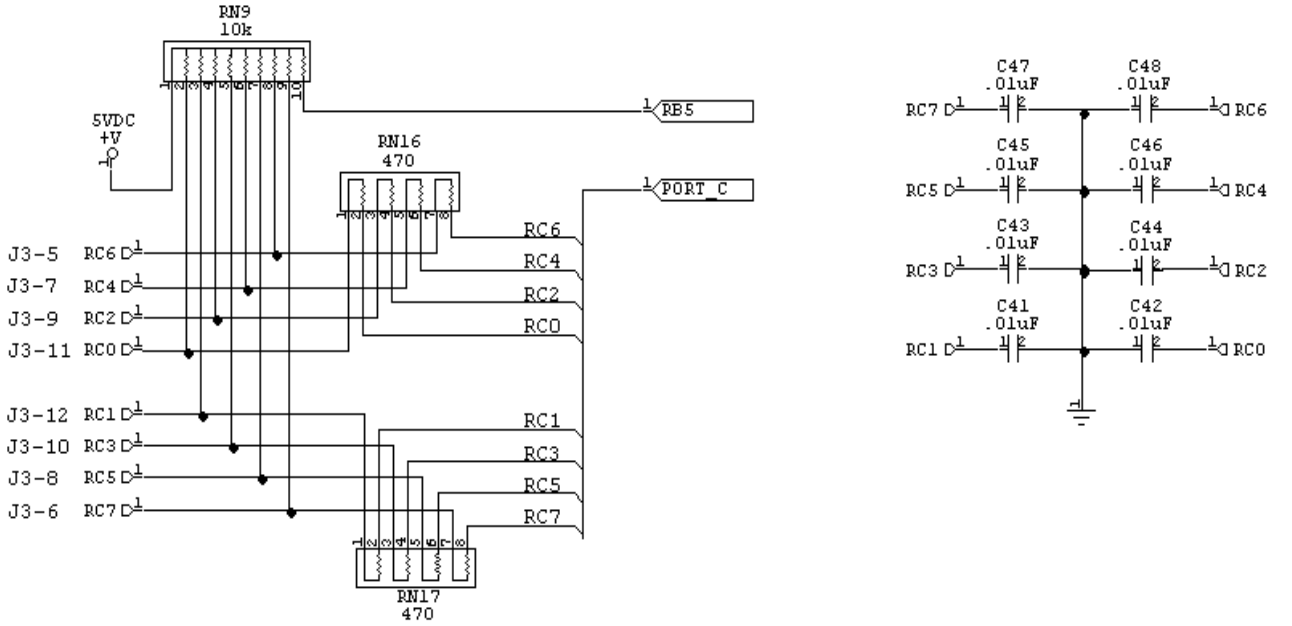

Output Section A – Chase Lights, Q13 - Q16

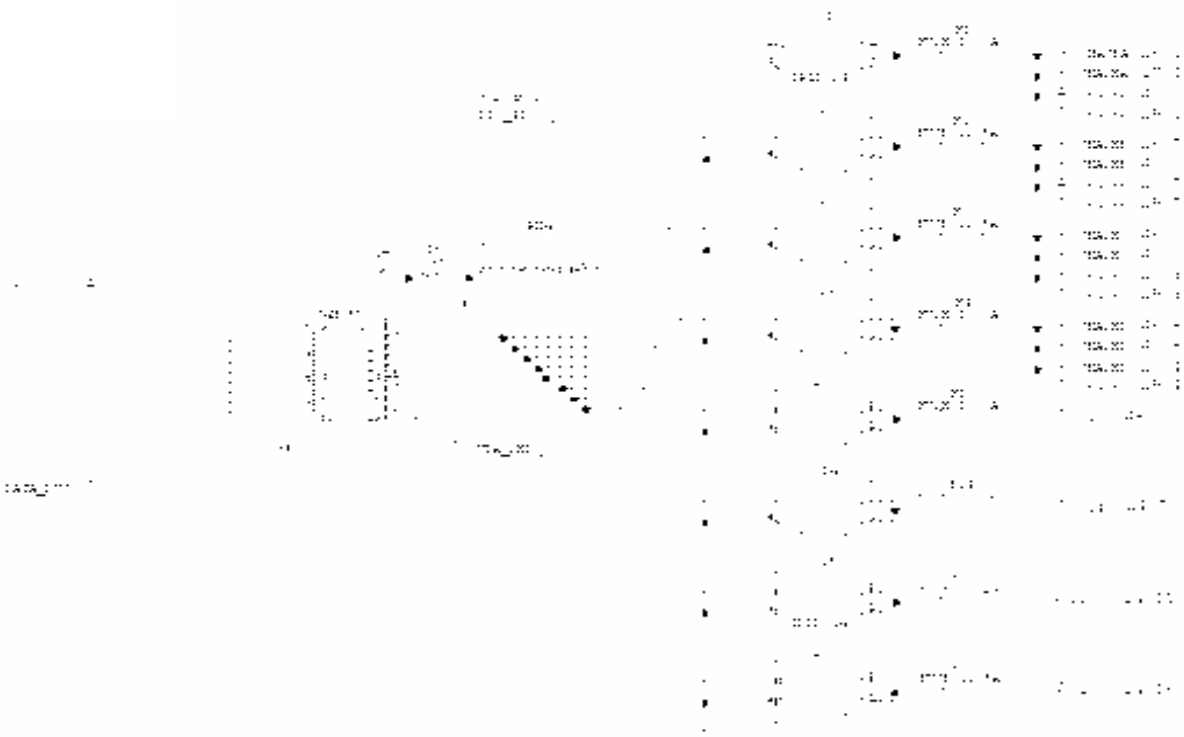

Output Section B – Q17 – Q24

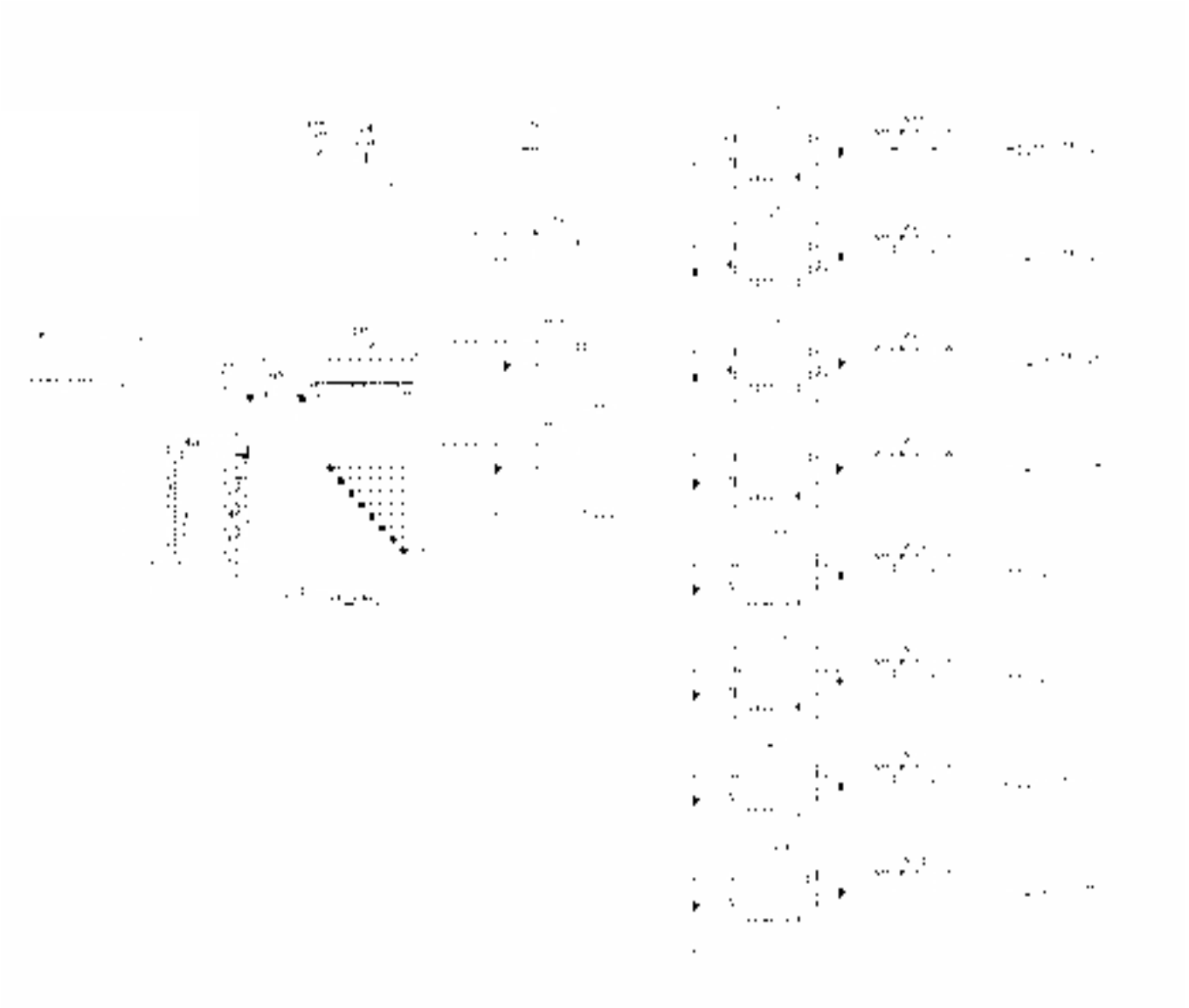

Output Section C – Q5 – Q12

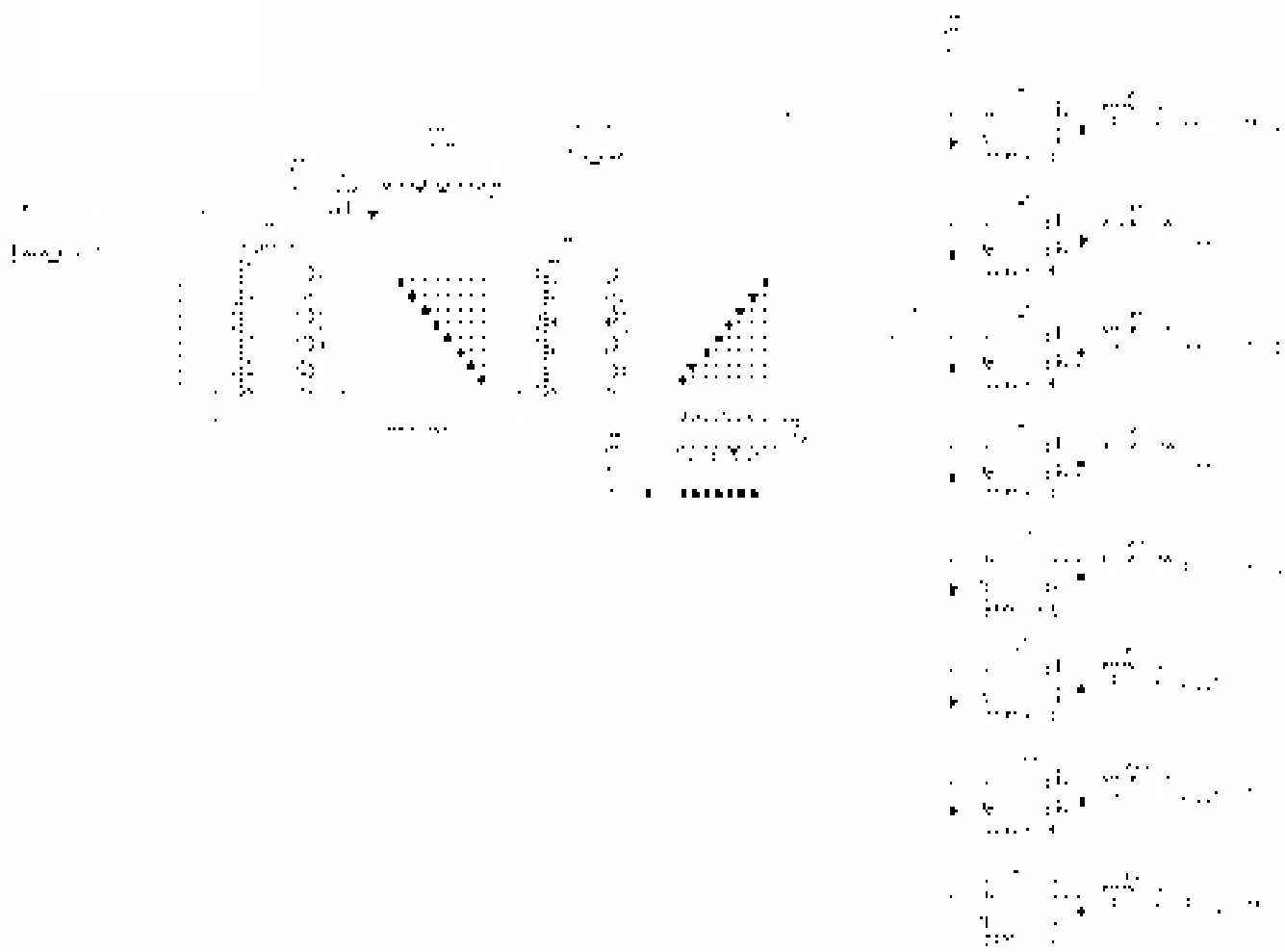

Power Section

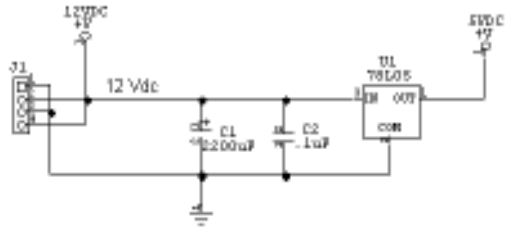

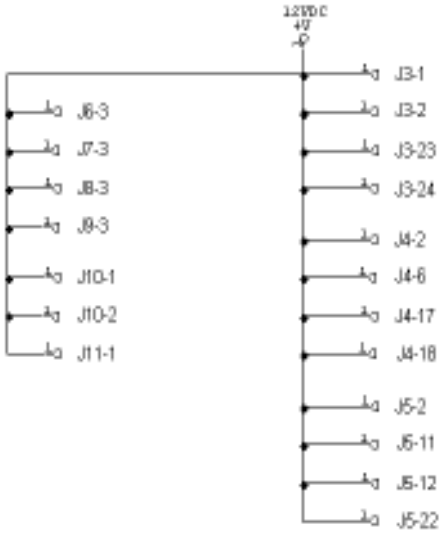

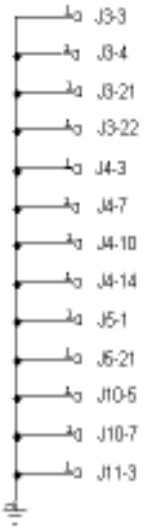

Processor Section – Input RD

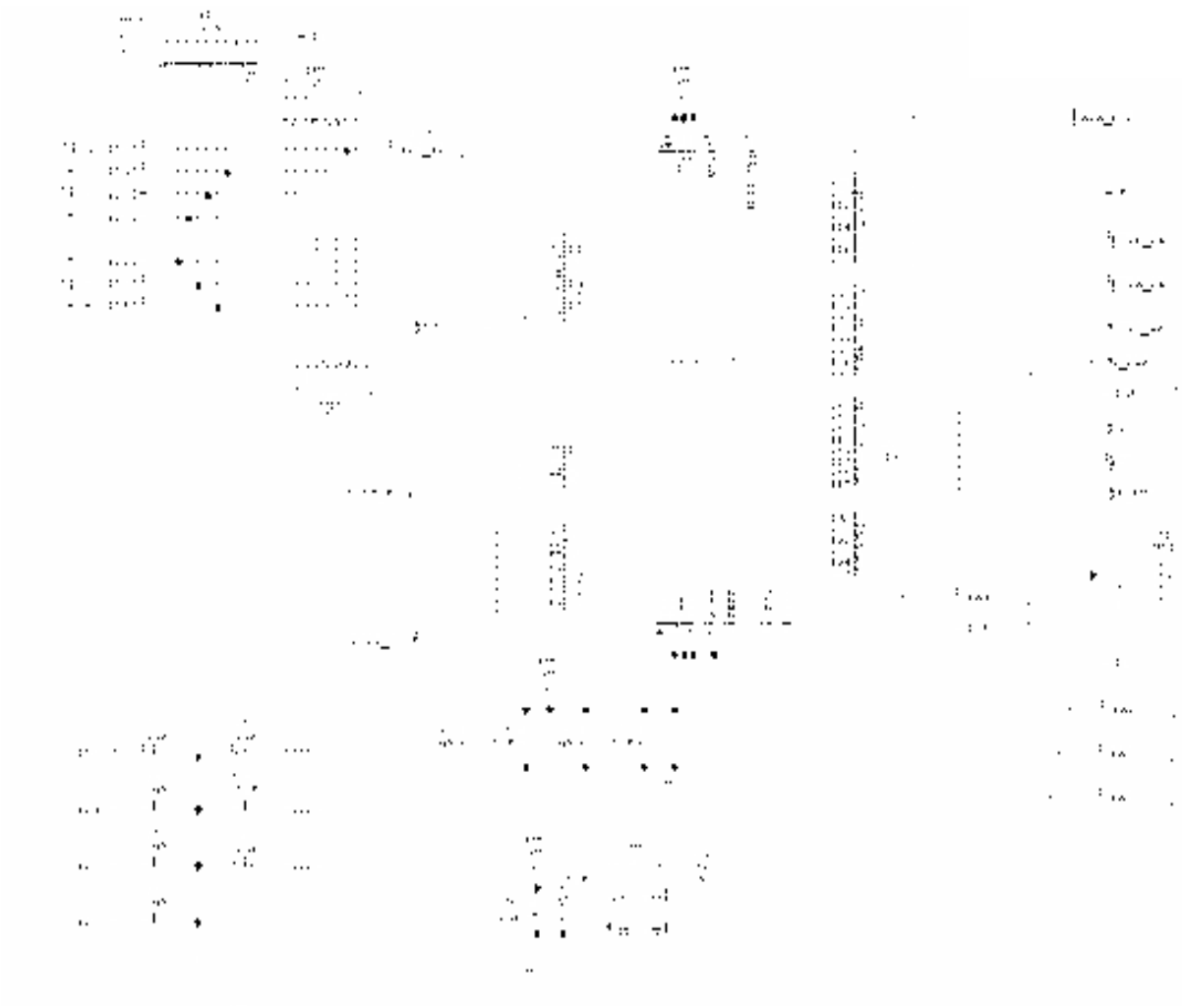

SPARE PARTS – SPEED DEMON

Always use genuine Bay Tek replacement parts. For 24 hour pricing and ordering visit our web site at www.baytekgames.com.

Description	Part #
Ball, Red	A5BA4021
Button, Large “Stop”	A5PB4022
Button, White, Reset	A5PB1000
Plunger, Ball	A5HA4021
Speaker, 5-1/4 X 5-1/4	A5SP1050
Volume Control	A5PO2000
Solenoid, Ball Kicker	A5SO4021
Ticket Dispenser	A5TD1
Counter	AACO1000
Motor, Playwheel	AAMO4020
Gear, Small	A5GR4021
Gear, Large	A5GR4020
Bushing, Shaft	A5BU4021
Setscrew (for bushing)	91375A103
Playfield Ring Assembly	AAPR4020
Playfield Turntable Assembly (Incl. Red Demon)	AAPT4020
GLASS	
Top Tempered Glass (26” x 23”)	A5TG4020
DECALS	
Numerical Decals for Ring	A5DC4024
Front Decal	A5DC4026
Side Decal	A5DC4021
Decal, Yellow with numbers 1 to 8	A5DC4025
Left Playfield Graphics	A5FP4024
Right Playfield Graphics	A5FP4025
Front, Top Instruction Panel	A5FP4023
Bonus Ring, Inner	A5AC4021
Bonus Ring, Middle	A5AC4022
Bonus Ring, Outer	A5AC4023
LIGHTING	
Chase Light, Long, 25.5”	A5CL9091
Chase Light, Short, 6”	AACL9092
Tape, Double-Sided	1F256
Fluorescent Light Assembly 18” 15 watt	AAFL1000
Fuse, 2 Amp, 250 V	A5FUSE3
ELECTRONICS	
Power Supply	A5PS1001
Main Board	AAMB5A
Audio EPROM	AAEP-SD
Microcontroller	AAMC-SD

Progressive Sign Power Supply (if equipped) S5PS5104
PCB Ball Sensor, Wheel AABD4012
PCB Ball Sensor, Plunger AABD4011
Wheel Position Sensor AASE4020
Diode, Infrared Emitter A5DI1300
Diode, Infrared Detector A5DI1310
AC Driver Board AABD5029
Display, Speed Demon AABD4000
Display, Outer Ring, PCB AABD4001
Display, Center Ring, PCB AABD4002
Display, Inner Ring, PCB AABD4003

TECHNICAL SUPPORT

Technical Support– Know Your Options!

Excellent Customer Service is very important to Bay Tek! We know that keeping your games in great operating condition is important to your business. When you need us, we are here to help. You can call us for free technical assistance, and you can count on us to have parts on-hand to support your game. When you do need us, it's important that you know what to expect. We offer options that fit your needs.

Call us M-F
8am-5pm CST at
(920) 822-3951 ext 1102

Fax us at
(920) 822-1496

Email us 24 hours a day at
service@bay-tek.com

Also order parts online at
www.bay-tek.com

Send parts to
1077 E Glenbrook Dr
Pulaski, WI 54162

Electronics / Circuit Boards:

- Repair & Return – If you have Circuit Board issues with your Bay Tek game, you can send the board to us and we'll repair it right away. Most items sent to us are repaired and returned to you within one day. This option is your best value as we offer this fast turn-around service at the most reasonable price.

- Advance Replacement – If you have Circuit Board issues with your Bay Tek game, but you don't have time to send in your board for repair, give us a call and ask for an Advance Replacement. We'll send you out a replacement board that same day. This is your best option when you need to get your game up and running as quickly as possible! When you get your new board, just repackage the defective board in the same box and send it back to us. We make it easy by including a UPS Return-Shipping label for you to put on the box.

- Spare Parts – Take matters into your own hands and purchase new spare Circuit Boards for your Bay Tek games. Many of our games share the same main-board electronics. This means you can buy one set of spare electronics to support many of your Bay Tek games. Spare boards allow you to get your game up and running the quickest and provide you a valuable troubleshooting option. Call our technicians to get recommendations for what you should keep on hand for spare parts!

Technical Support:

"You" are the best tool for troubleshooting! Your abilities to understand the game and your skills to repair the game are invaluable to us! If you need help, give us a call. It's not easy to diagnose a game remotely by phone, but our technicians do a great job. They'll need your help to perform some troubleshooting steps and convey to them exactly what's happening with your game. Be sure to have your game Serial Number when you call in.

Returns & Credits:

Sometimes the issue isn't what it seemed to be. If you chose the Advance Replacement option and now need to return that circuit board, just give us a call to get Return Authorization. You will be credited for the cost of the board and charged only the bench fee for our processing and retesting that board. If you choose the Repair and Return option, we'll test your board before we begin. If no problems are found, you will only be charged the bench fee.

Note: Bench fees apply regardless of whether the repair was your choice or a recommendation from a Bay Tek technician. It's a small price to pay for troubleshooting the issues with your game.

You can count on our Technical Team for service and support! BAY TEK

OPTIONAL TICKET PATTERNS

Factory Default Pattern #1

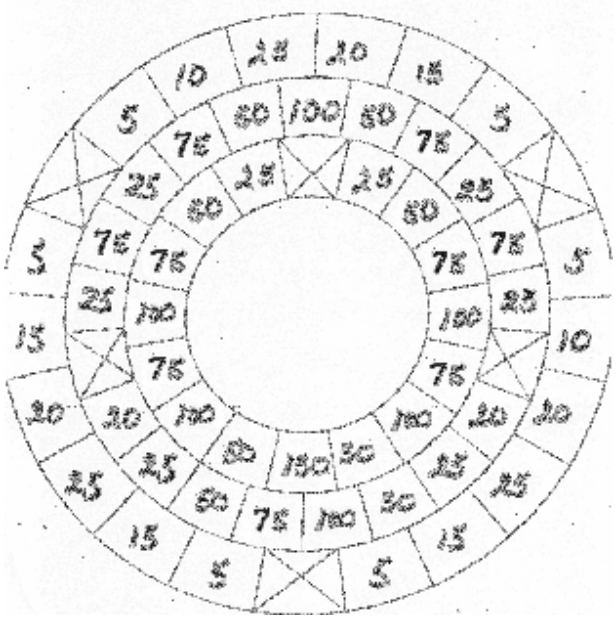

Pattern #3

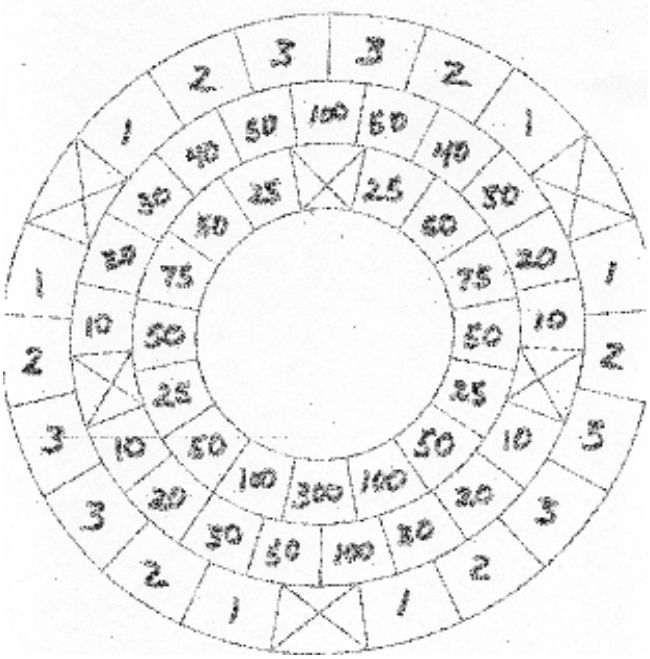

Pattern #2

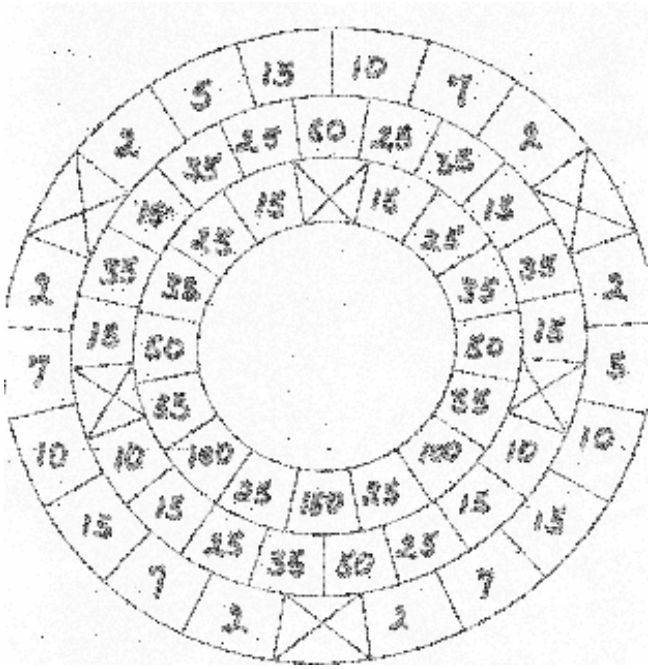

Pattern #4

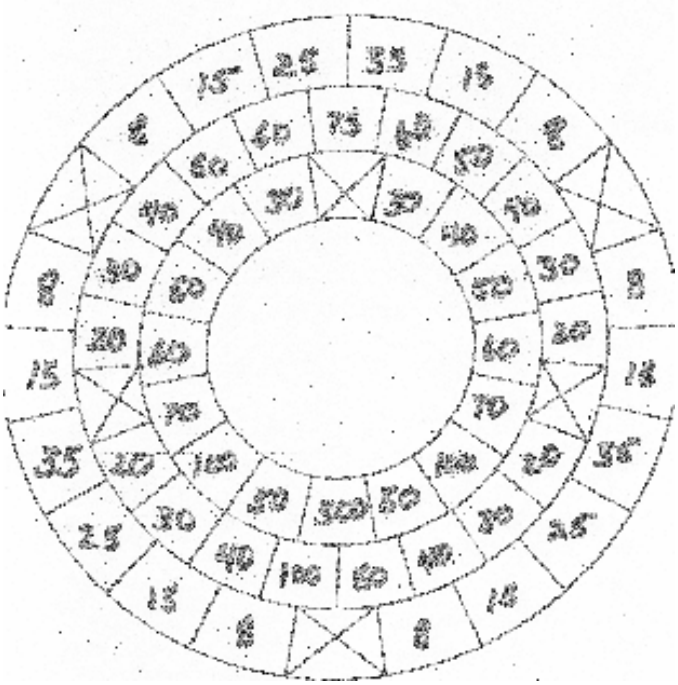

Pattern #5

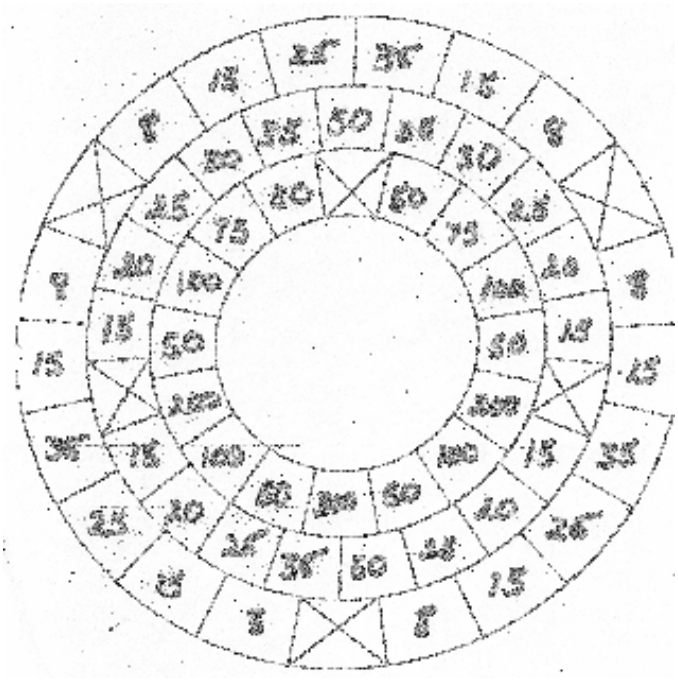

Pattern #7

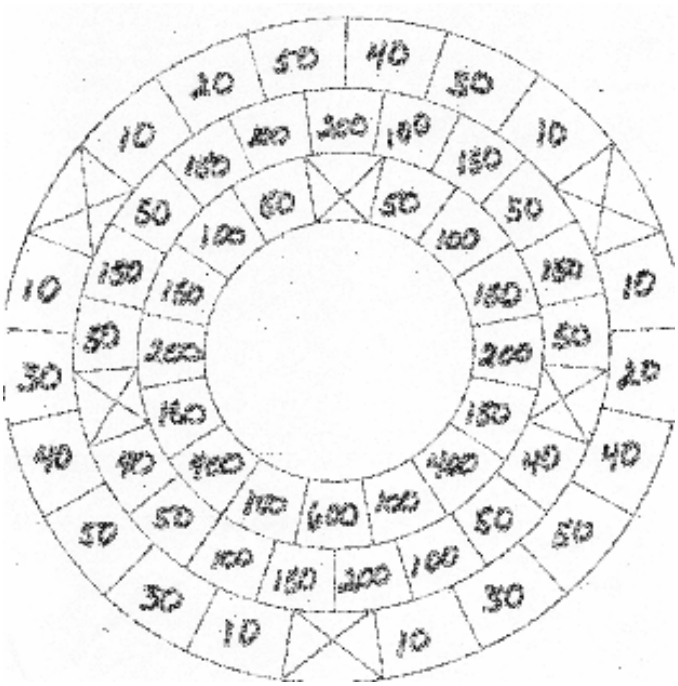

Pattern #6

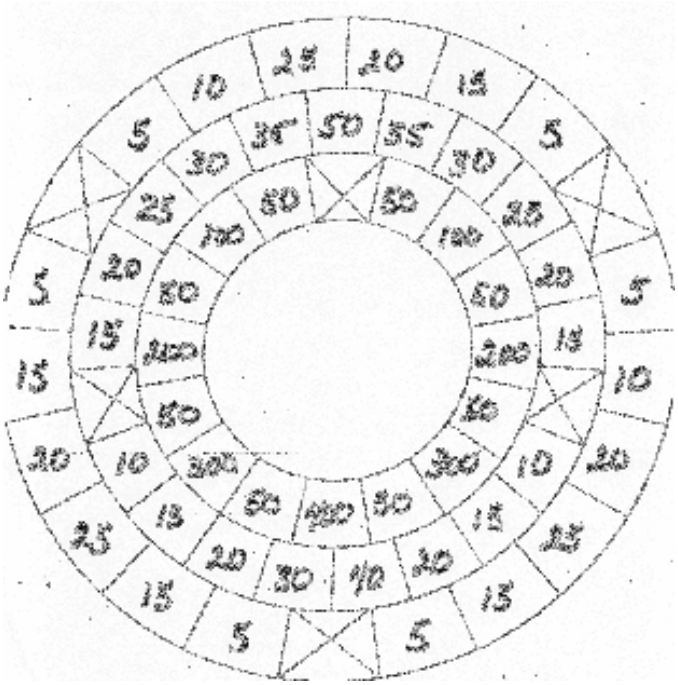

Pattern #8

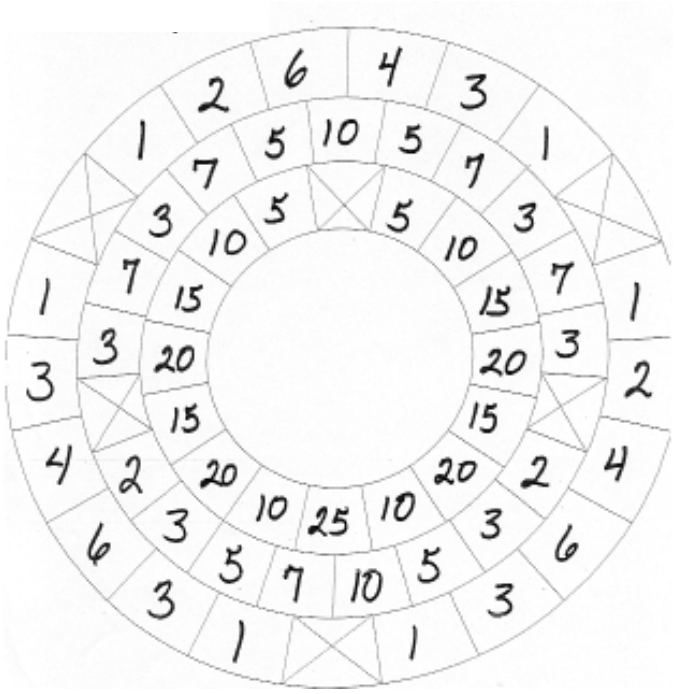

WARRANTY INFORMATION

Bay Tek Games, Inc. warrants to the original purchaser that the game will be free of defects in workmanship and materials for a period of six months from the date of installation.

Bay Tek Games, Inc. will, without charge, repair or replace at its option defective product or component parts upon notification to the factory service department. Serial number identification will be required for warranty consideration.

Warranty replacement part(s) will be shipped immediately via ground service, along with a Return Material Authorization (RMA) number for the return of the defective part(s). Defective parts must be shipped back to Bay Tek Games, Inc. unless otherwise instructed.

This warranty does not apply in the event of any misuse or abuse of the product, or as a result of any unauthorized repairs or alterations. This warranty does not apply if the serial number is altered, defaced or removed from its original position.

Should your game need servicing, determine the serial number from the logic unit of the game, and call 920-822-3951 or email service@baytekgames.com

REPAIR OF NON-WARRANTY UNITS

Should your game need servicing, determine the serial number from the logic, and call 920-822-3951 or email service@baytekgames.com. An estimate of repair charges will be quoted to you for approval.

Proceed in one of the two following ways:
- Request immediate shipment of advanced replacement parts.
- Send in the defective unit for repair and return.

If advanced replacement(s) are requested, you will receive with your parts an RMA number for the return of the faulty part(s). You must return defective parts within 14 days to avoid additional charges.

Should you choose to return parts for repair, include the following:
- Name, address and phone number including area code.
- Game serial number information.
- A purchase order number, work order number or signed authorization to perform service.

Repair and Return parts will be shipped back using the same mode of transportation under which they were received. Repairs are warranted for a period of thirty (30) days from the date installed into service.

For future reference;

Serial number _____

Date of Installation_____

Installed by _____

REPAIR RECORD

Make copies of this form.

Game_____ Serial Number_____

Date Initials	Maintenance Performed	Parts Replaced	Cause/Notes

NOTES